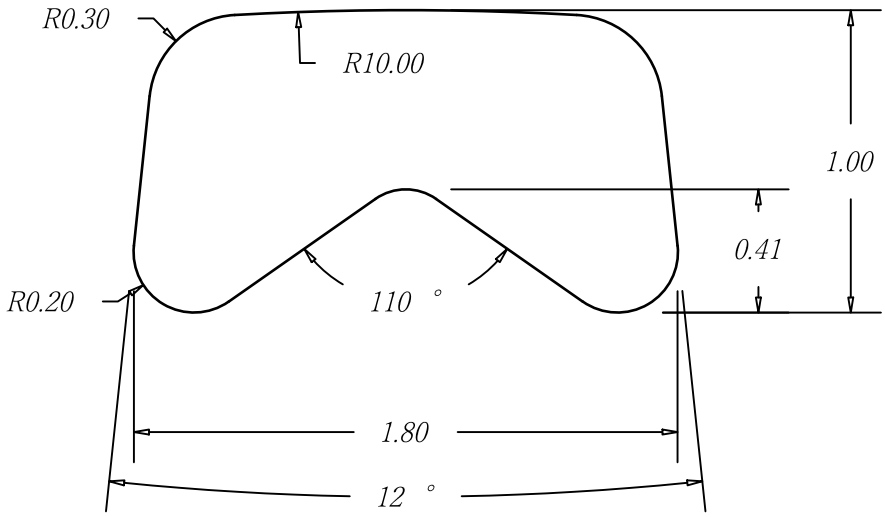
R0.30
R10.00
1.00
0.41
R0.20
110 °
1.80
12 °